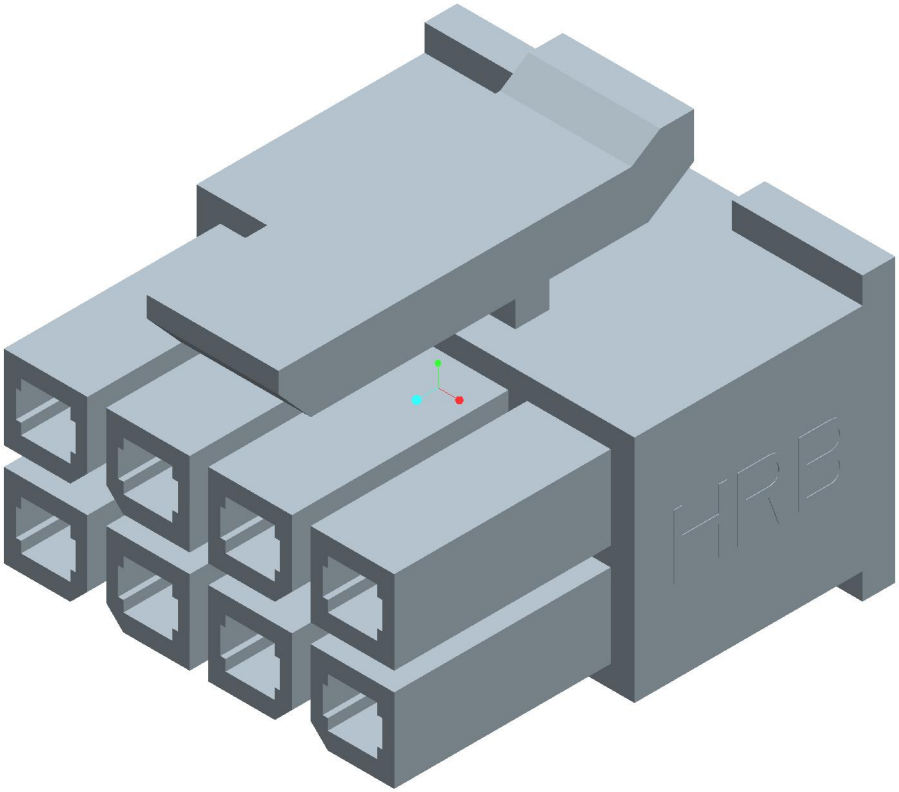
HRB